CBU B.S. in Chemical Engineering – Curriculum Flowchart (2026-27, EGR181 ENG113/123)

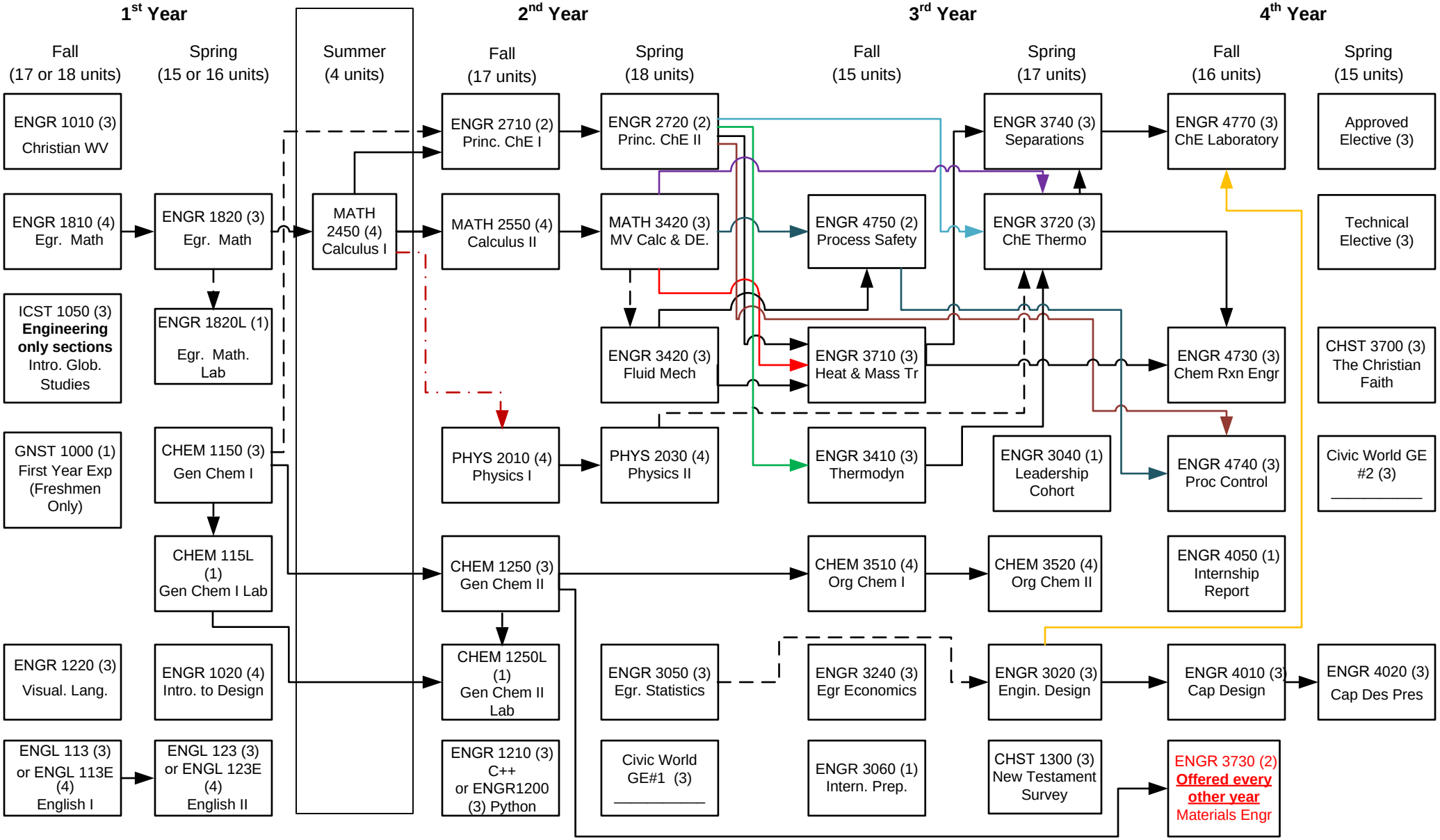

2 Civic World GE courses (3 units each): (see University Catalog)

Other Requirements:

- Take an approved professional exam, such as the FE Exam.
- Complete a pre-approved and supervised internship of a minimum of 200 hours with a maximum of 1200 hours

Co-requisite
Prerequisite

This chart is meant to be a helpful reference. Students should look at their catalog to see official degree requirements and updated course pre-requisites.