CBU B.S. in Biomedical Engineering – General Studies Curriculum Flowchart (2022-23, EGR182)

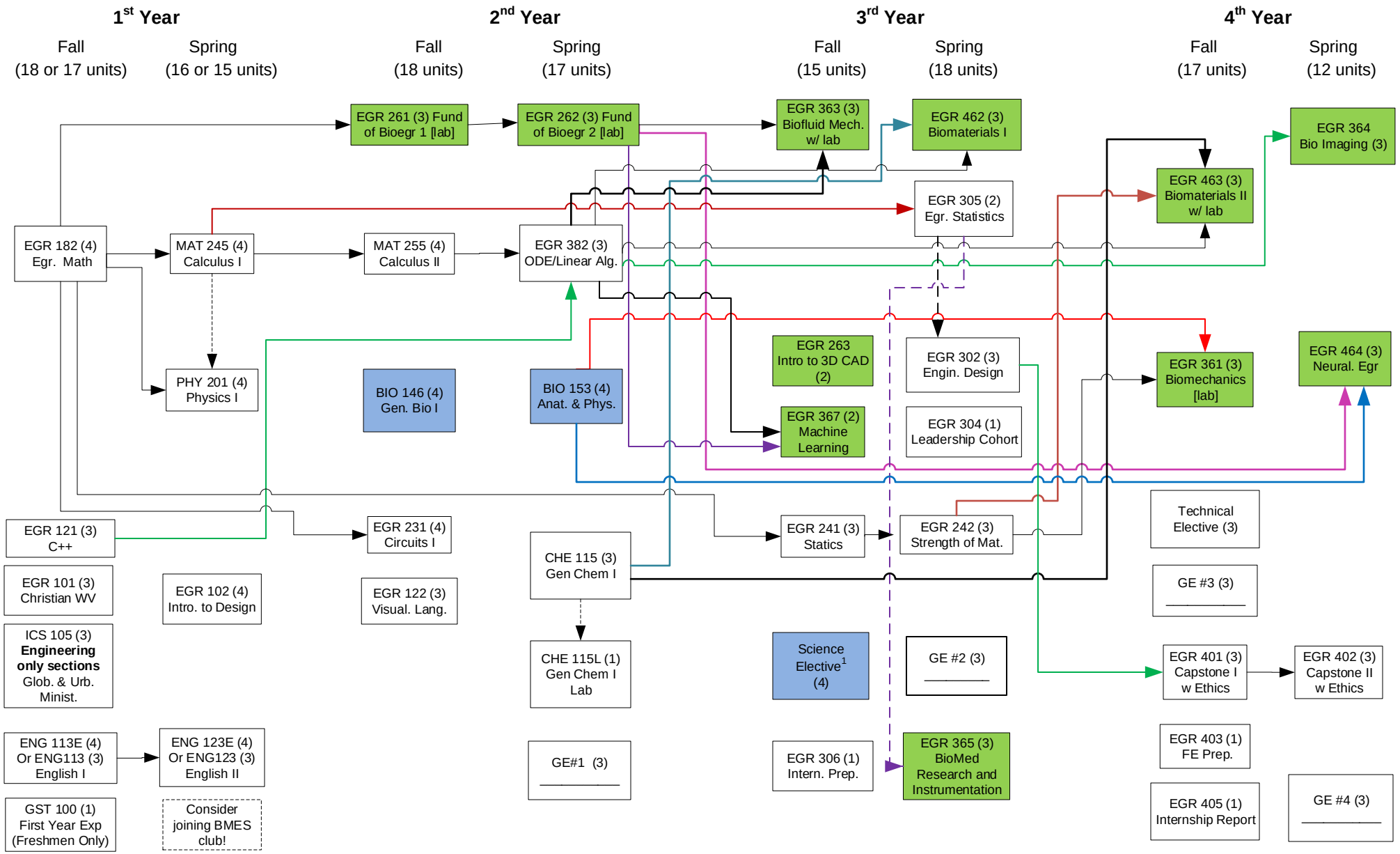

4 GE's (3 units ea) :
2 Christian Studies (CST or ICS)
2 Civic World
[see University Catalog]
Complete an approved cross-cultural experience -
Complete a pre-approved and supervised internship of a minimum of 200 hours with a maximum of 1200 hours

NOTES:
1 Science Elective can be met by:
PHY 203: Physics for Egr's II w Lab (4)
BIO 163: Anatomy and Physiology II w Lab (4)
BIO 313: Genetics (4)
CHE 125/125L: Gen. Chem II w Lab (4)

Note that this flowchart is designed to be a helpful guide. For official degree requirements please see your catalog.